Tagra | Fire Rated | Standard | Surface Mounted Downlight | Fixed | IP65 | Black

SD-STDF-B / ITM001298

Datasheet

16-10-2026

www.tagra-lighting.co.uk

support@tagra-lighting.co.uk

Tagra | Fire Rated | Standard | Surface Mounted Downlight | Fixed | IP65 | Black

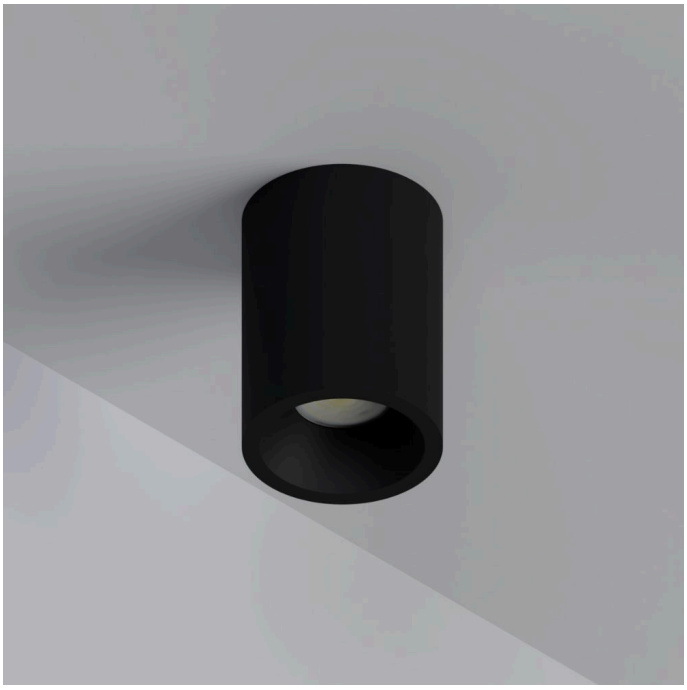

IP Rating	Mounting	Warranty
IP65	Surface	2 Years

SKU: SD-STDF-B
ITM: ITM001298

Key Features:

- **Body Colour:** Black
- **Dimensions (W x H x L):** 84 x x 84mm

Mechanical Data			
Body Colour:	Black	**Product Weight:**	258g
Product Diameter:	84mm		

Environmental Data			
Anti-Glare:	Yes	**Application Environment:**	Interior
Body Material:	Aluminium	**Ingress Protection (IP):**	IP65
Mounting Type:	Surface Mounted		

Protection Data	
Electrical Safety Class:	I

Dimension Drawing

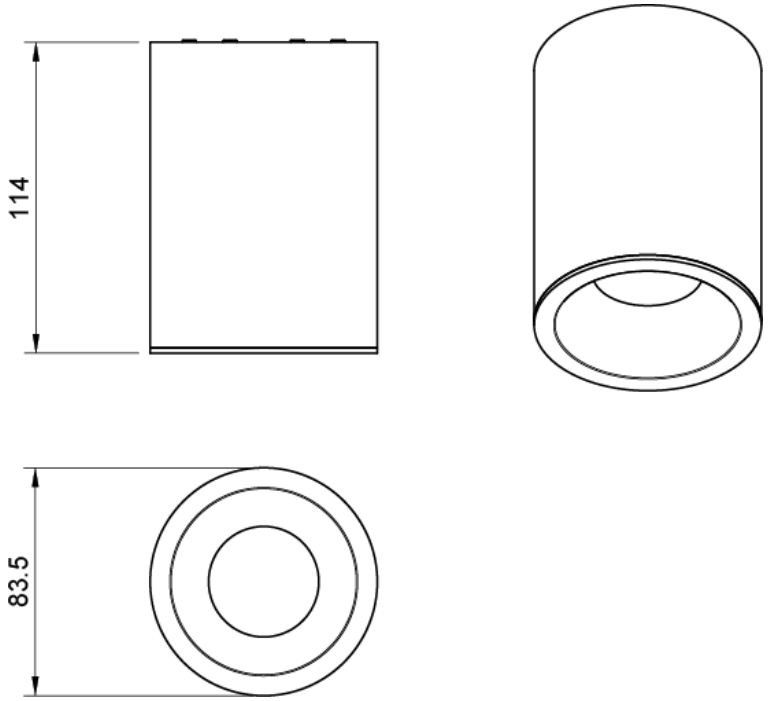

Packaging Data

Fixings Included:	Yes	**Packaging Height:**	95mm
Packaging Length:	95mm	**Packaging Width:**	130mm

Disclaimer

Tagra Lighting have taken reasonable care to ensure that the information in this datasheet is accurate at time of publication however it should be noted that all specifications are subject to tolerance. Descriptive specifications such as colour are subjective. Tagra Lighting reserve the right to update specifications without notice. The information in the datasheet may only be relied on by customers of Tagra Lighting in accordance with applicable terms and conditions.

Tagra Lighting is a trading name of T.R Ventures Limited, a company incorporated in England with registered number 07757720. Our registered office is Unit 2, Southfield Industrial Estate, Trafford Park, M17 1SJ.

www.tagra-lighting.co.uk

support@tagra-lighting.co.uk

LIAQA ASSURED COMPANY

LIGHTING INDUSTRY ASSOCIATION